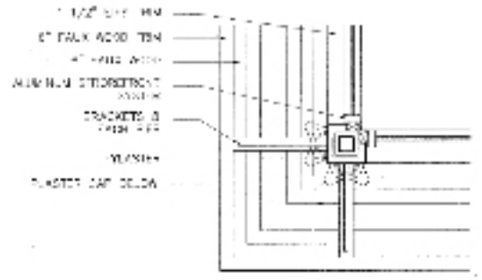

10 BUILDING G (KIOSK) PARTIAL RCP

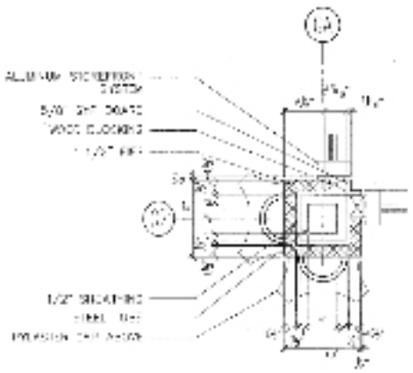

9 BUILDING G (KIOSK) DETAIL

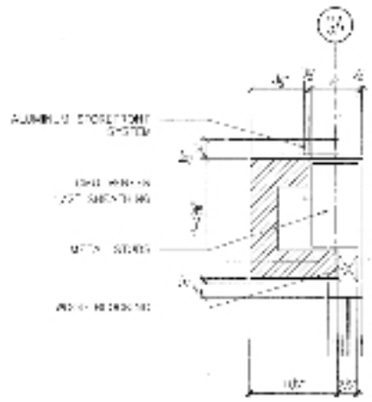

8 BUILDING G (KIOSK) DETAIL

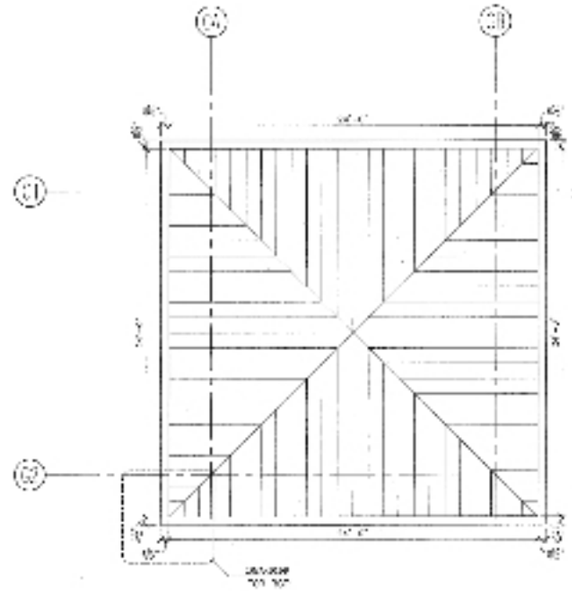

7 BUILDING G (KIOSK) ROOF PLAN

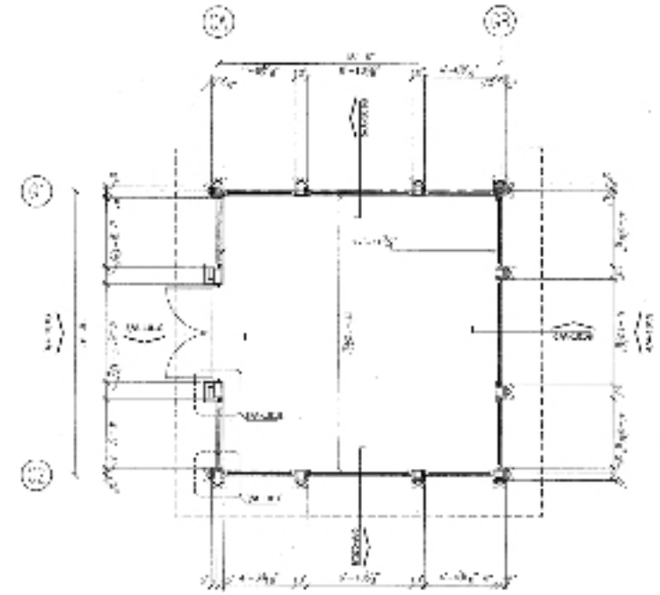

2 BUILDING G (KIOSK) PLAN DETAIL AT STOREFRONT HEIGHT

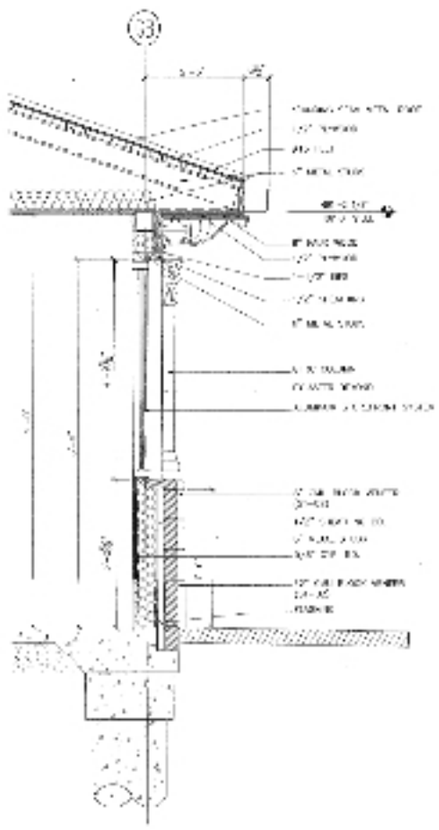

6 BUILDING G (KIOSK) WALL SECTION

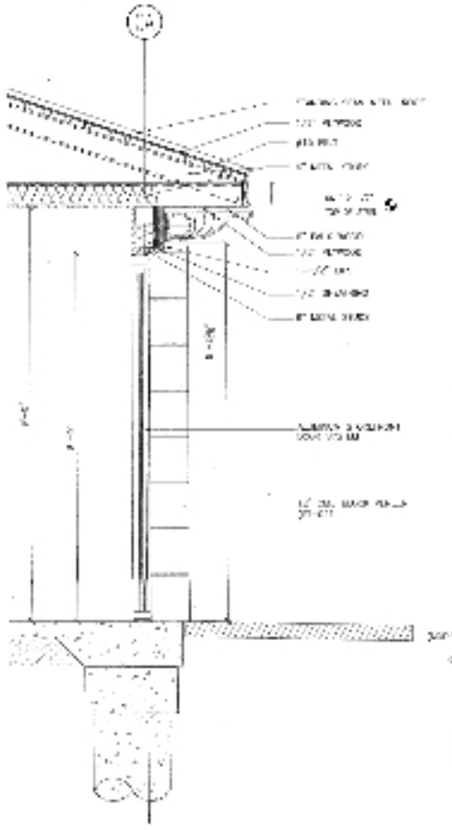

5 BUILDING G (KIOSK) WALL SECTION

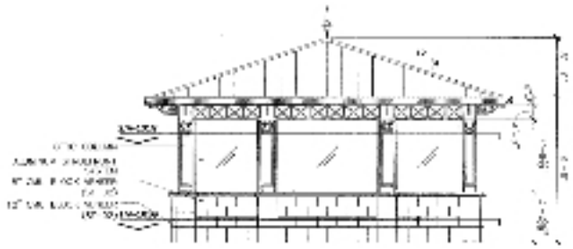

4 BUILDING G (KIOSK) SIDE AND REAR ELEVATION

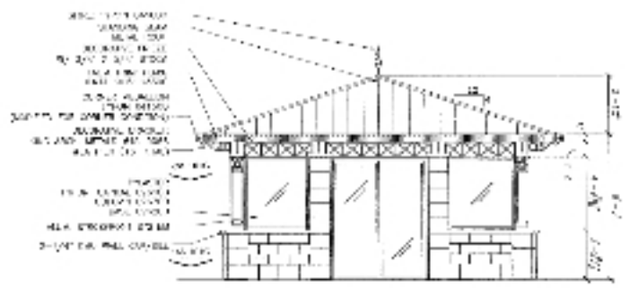

3 BUILDING G (KIOSK) ENTRY ELEVATION

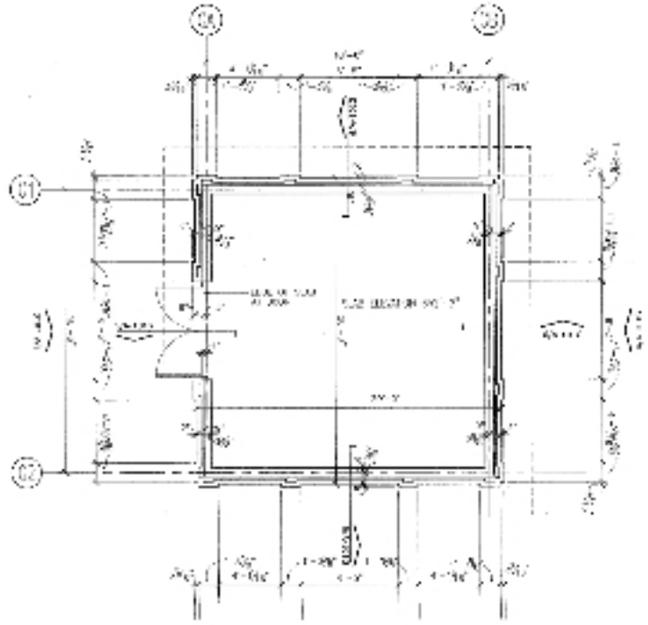

1 BUILDING G (KIOSK) PLAN DETAIL AT WAINSCOT HEIGHT

KEY PLAN

PRIME DETAIL

PRIME OUTLETS at SAN MARCOS

Carter=Burgess

BUILDING G AND BUILDING H

A-101g